Parts Catalogue

GCRO 7010 Offset Disk Harrow - October 2006

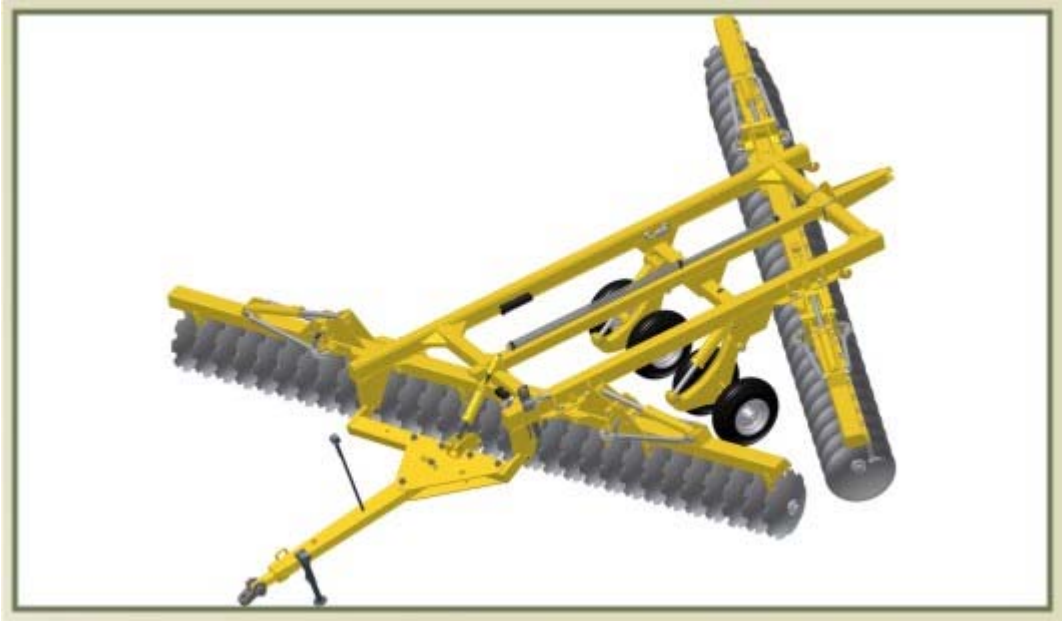

PEÇA
PEÇAS
ORIGINAIS

Plantadeiras
Implementos
Discos
Ferramentas Agrícolas

TATU
MARCHESAN

Index

Frame GCRO 7010 48	conj. 1
2"X5"X25.75"X13.62" HYDR Cyl	conj. 2
50,8X101,6X515X20 HYDR Cyl	conj. 3
Gang Disc 48	conj. 4
Gang Disc 48	conj. 5
Drawbar Assy	conj. 6
Hidraulic Circuit 48	conj. 7
Frame GCRO 7010 52A56	conj. 8
Hidraulic Cylinder	conj. 9
Stabilizer For Gang	conj. 10
Gang Disc 52	conj. 11
Gang Disc 52	conj. 12
Gang Disc 56	conj. 13
Gang DIsc 56	conj. 14
Hidr Circ 52 And 56 Discs	conj. 15
262MM X 1.5/8"RD. Oil Bath	conj. 16

Attention :

Marchesan S.A. reserves the right to improve/or modify technical features of its products without thereby becoming liable to proceeding likewise with the products sold such improvements or modifications its dealers or clients.

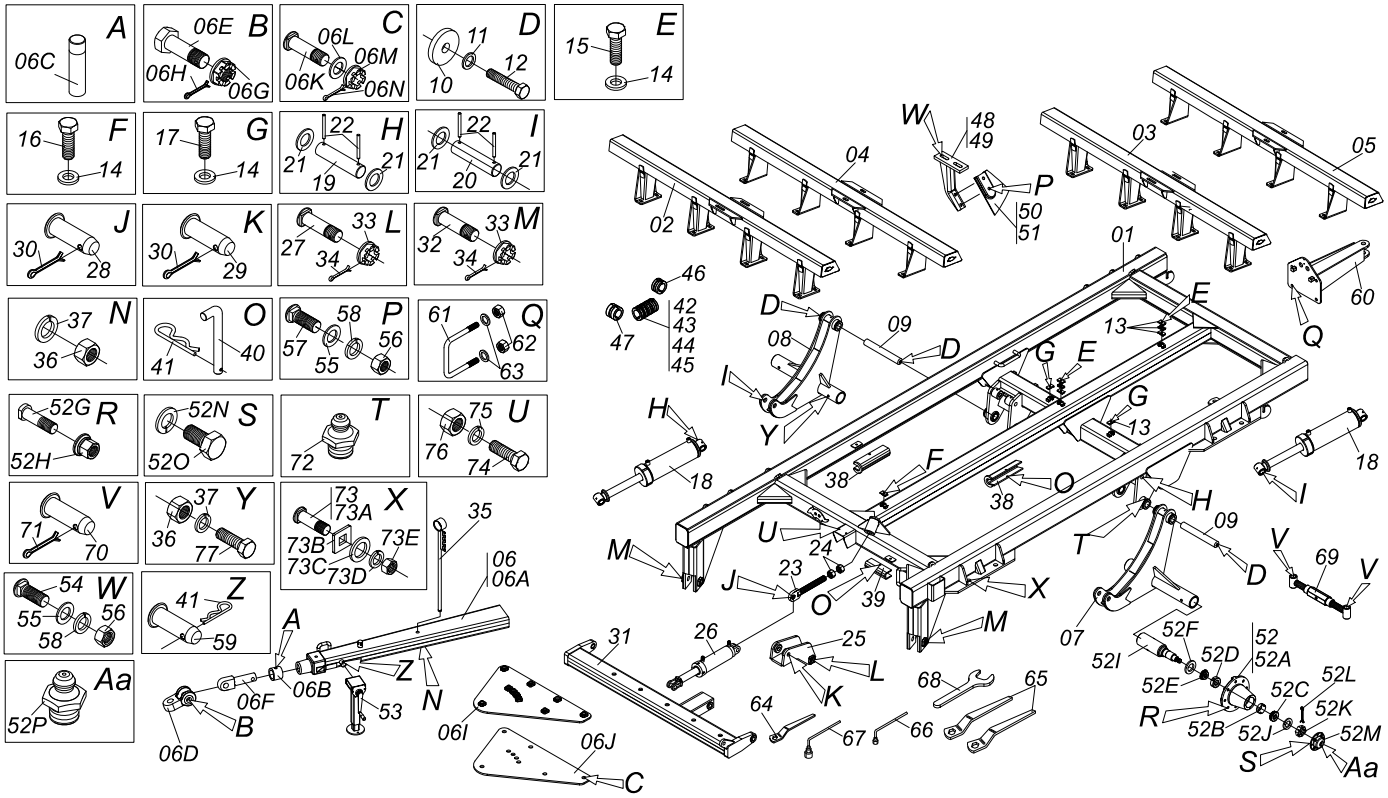

Nº	CÓDIGO	DESCRIPTION	
01	0511066590	CENTER FRAME	01
02	0511066045	FRONT GANG CARRIER	01
03	0511066046	LEFT FRONT GANG CARRIER	01
04	0511066047	RIGHT REAR GANG CARRIER	01
05	0511066048	LEFT REAR GANG CARRIERR	01
06	0511041592	DRAWBAR ASSY	01
06A	0511064669	DRAWBARPCW	01
06B	0502040263	LOCK RING	01
06C	0501014219	32M107 PIN	01
06D	0502040293	YH-90 CLEVIS	01
06E	0511067199	BOLT	01
06F	0502040264	DRAWBOLTCO	01
06G	0502040558	CASTLE NUT	01
06H	0503010074	3/8X0,15"COTTERPIN	01
06I	0511064659	UPPER PLATE	01
06J	0511064658	LOWER PLATE	01
06K	0521011880	37,50X242 COUPLING SHAFT	01
06L	0501012916	FLAT WASHER	01
06M	0501011301	S1.1/2"CASTLE NUT	01
06N	0503010010	1/4"X2.1/2"COTTERPIN	01
07	0511066611	LEFT CARRYING-WHEELS SUPPO	01
08	0511066741	RIGHT CARRYING-WHEELS SUPP	01
09	0531018062	16"COUPLING SHAFT	02
10	0521011565	1.04"x3.54"x0.37"FLAT WASHER	04
11	0503010012	1" SPRING WASHER	04
12	0503011250	C1"X2"BOLT	04
13	0502010477	UPPER CLIP	10
14	0503010180	7/16"SPRING WASHER	05
15	0503011102	7/16"X1-1/4"BOLT	02
16	0503011103	7/16"X2-1/2"BOLT	01
17	0503010851	7/16"X3.1/2"BOLT	02
18	0511041599	2"X5"X25.75"X13.62" HYDR C (ass. 2)	02
19	0531018105	1.2"X11.8"PIVOT SHAFT	02
20	0531018101	1.2"X6.3"PIVOT SHAFT	02

Nº	CÓDIGO	DESCRIPTION	
21	0501017779	FLAT WASHER	08
22	0503011877	0.3" X 2.4" SPRING PIN	08
23	0511064433	REGULATOR SPINDLE	01
24	0501010333	1.3/4" NUT	02
25	0511064656	DRAWBAR PIVOT	01
26	0501049064	50,8X101,6X515X20 HYDR (ass. 3)	01
27	0521012053	1.5"X8.6"AXLE	01
28	0521012538	1.2"X3.5"COUPLING SHAFT	01
29	0531019171	1.25"X7"COUPLING SHAFT	01
30	0503010523	1/4"X2"COTTERPIN	02
31	0511066478	HITCH BAR0	01
32	0531018100	GA1.4"X8.6"COUPLING SHAFT	02
33	0501011301	1.1/2"CASTLE NUT	03
34	0503010010	1/4"X2.1/2"COTTERPIN	03
35	0511064470	HOSE HOLDER ASSY	01
36	0503010014	3/4"NUT	05
37	0503010023	3/4"SPRING WASHER	05
38	0511064985	TRANSPORT LOCK	02
39	0551010332	TRANSPORT LOCK	01
40	0541016844	FIXER LOCK	03
41	0503030168	HAIR PIN	04
42	0501047895	0.98"ROD STOP	03
43	0501047896	1.18"ROD STOP	03
44	0501047897	1.38"ROD STOP	03
45	0501047898	1.57"ROD STOP	03
46	0501047917	1.96"ROD STOP	03
47	0501047924	ROD STOP	03
48	0511065925	REAR SCRAPER SUPPORT	25
49	0511065926	FRONT SCRAPER SUPPORT	24
50	0541013461	FRONT SCRAPER SHOVEL	24
51	0541013463	REAR SCRAPER SHOVEL	25
52	0501056467	STUB SHAFT & HUB ASSY	04
52A	0502012260	TRANSP. BOX CARRYING-WHEEL	04
52B	0503013270	3720 CAP	04
52C	0503013271	3780 CONE	04
52D	0503013266	2720 CAP	04
52E	0503013267	2780 CONE	04
52F	0503013314	2.5X4.3X0.5 SEAL 5166	04
52G	0501010186	5/8"X2-1/8"CARRYING BO	32
52H	0503010064	5/8"CONIC NUT	32
52I	0541016566	SPINDLE	04
52J	0511012492	FLAT WASHER	04
52K	0503030009	1" X 0.9" CASTLE NUT	04
52L	0503010018	5/32"X1-1/2"COTTERPIN	04
52M	0502020591	COVER	04
52N	0503011444	5/16"SPRING WASHER	16
52O	0503010358	5/16"X7/8"BOLT	16
52P	0503010002	GREASE FITTING	04
53	0511043153	DRAWBAR JACK (ass. 6)	01
54	0503013842	C5/8"UNC X1-3/4"BOLT	98
55	0501012140	FLAT WASHER	196
56	0503010013	5/8"NUT	196
57	0503012195	5/8"X1-1/4"FRENCH BOLT	98
58	0503010027	5/8"SPRING WASHER	196
59	0541011345	16X68 PLUGER	01
60	0501069421	REAR HITCH GCRO	01
61	0541016679	7/8 UNF X188,5 CLAMP	02
62	0503010558	7/8"NUT	04
63	0503010408	7/8"SPRING WASHER	04
64	0501011432	1-1/2"AND 1-5/8 GANG BOLT	01

Nº	CÓDIGO	DESCRIPTION	
65	0501011431	1-3/4"GANG BOLT WRENCH	02
66	0501061609	3/4"WRENCH	01
67	0501062300	1-1/4"WRENCH	01
68	0541015451	2.3/8"X2.3/4"WRENCH	01
69	0501052005	STABILIZER FOR GANG (ass. 10)	01
70	0521010546	1.2"X5.7"COUPLING SHAFT	02
71	0503010523	1/4"X2"COTTERPIN	02
72	0503010002	GREASE FITTING	20
73	0501041102	C1-1/4"X3-3/4"BOLT	08
73A	0501015348	C1-1/4"X3-3/4"BOLT	08
73B	0501010953	1-1/4"SQUARE WASHER	08
73C	0531010713	FLAT WASHER	08
73D	0503010070	1.1/4"SPRING WASHER	08
73E	0501010087	1.1/4"UNC NUT	08
74	0503010765	3/8"X3"BOLT	02
75	0503010025	3/8"SPRING WHASHER	02
76	0503010026	3/8"NUT	02
77	0503013185	3/4"UNC X5.1/2"BOLT	04

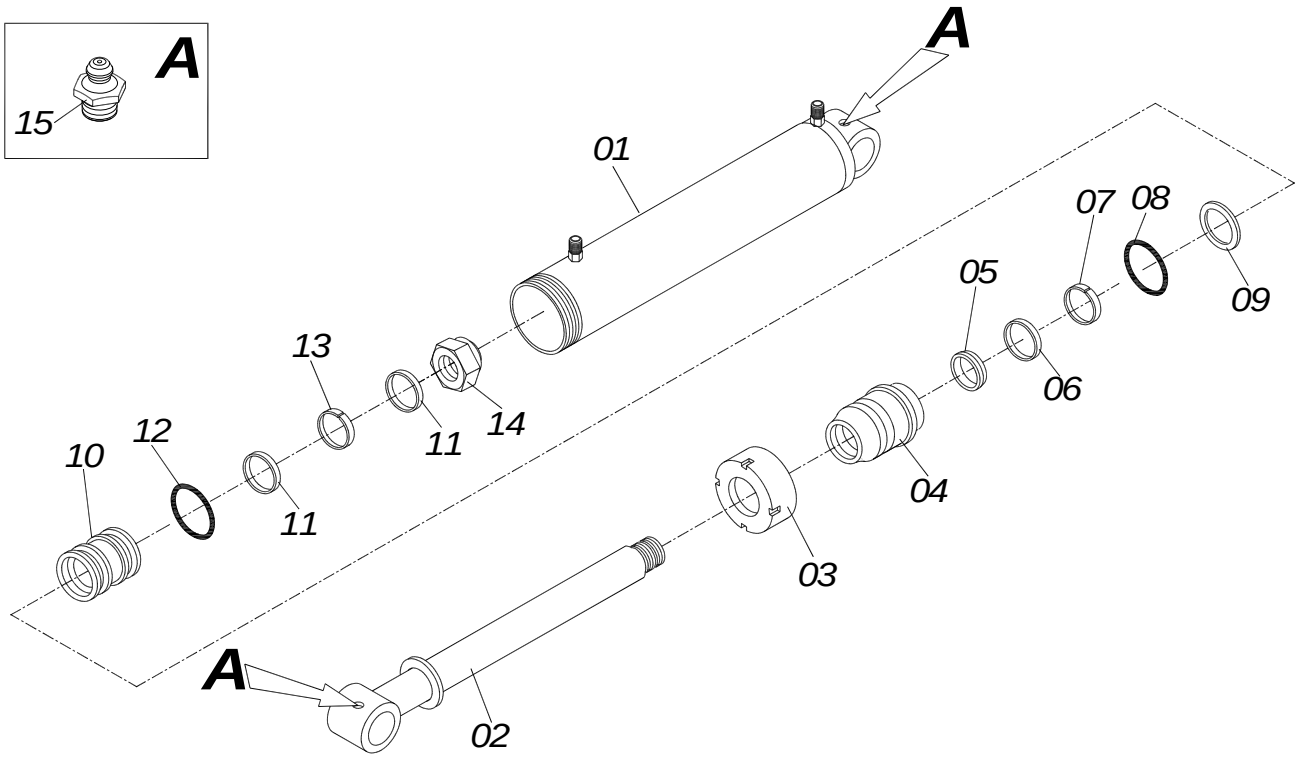

N°	CÓDIGO	DESCRIPTION	
00	0511041599	2" X 5" X 25.75" X 13.62"HYDR C	01
01	0511064729	5"X22"CASE	01
02	0511064728	2"X23"TURNBUCLE	01
03	0502010382	5"HEAD	01
04	0502011000	2"X5"RING SUPPORT	01
05	0503010039	D-2000 SCRAPER RING	01
06	0503010991	PACKING 1870-2000-375-B	01
07	0503010952	W2-2250-500 PK O'RING G.E	01
08	0503010351	2-425 N 3006-9B O'RING	01
09	0503011062	8-425 BACK-UP RING	01
10	0502010963	2.0"X5.0"EMBOLO	01
11	0503010552	PACKING 3750-4250-625-B	02
12	0503010345	2-218 N 3006-9B O'RING	01
13	0503010974	W2-5000-500 PK O'RING G.E	01
14	0503010817	1.1/4"UNF SELF ADJUSTING	01
15	0503010002	GREASE FITTING	02
16	0501031961	REPAIR KIT	01

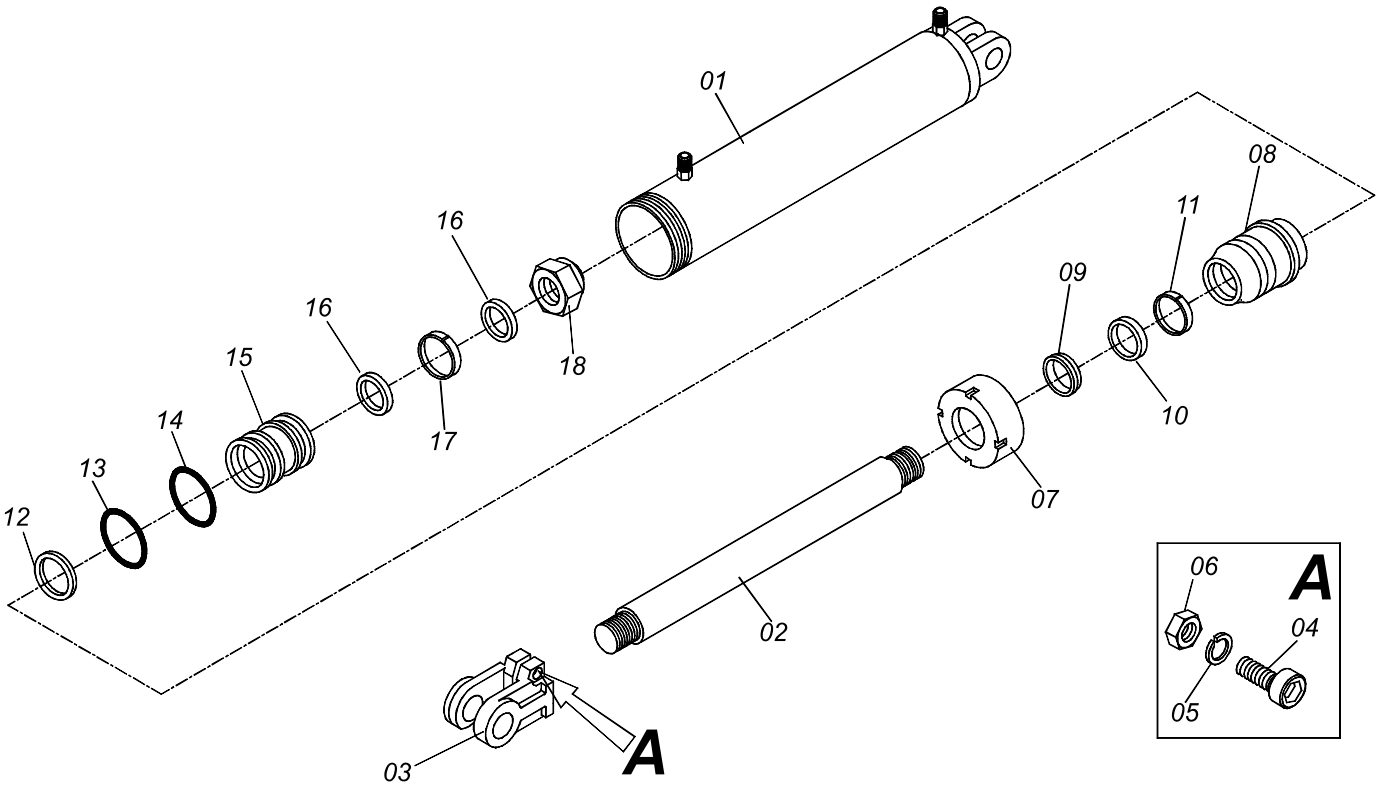

N°	CÓDIGO	DESCRIPTION	
00	0501049064	50,8 X 101,6 X 515X20 HYDR CYLINDER	01
01	0511061336	101,6 X 398 CASE	01
02	0501018528	2" X15.3" TURNBUCLE	01
03	0502040747	FORK	01
04	0503011094	3/8" X 2" BOLT	01
05	0503010025	3/8" SPRING WASHER	01
06	0503010026	3/8" NUT	01
07	0502010017	4" HEAD	01
08	0502010778	2" X 4.2" RING SUPPORT	01
09	0503010039	D-2000 SCRAPER RING	01
10	0503010991	PACKING 1870-2000-375-B	01
11	0503010952	W2-2250-500 PK O'RING G.E	01
12	0503011061	8-342 BACK-UP RING	01
13	0503010338	2-342 N 3006-9B O'RING	01
14	0503010345	2-218 N 3006-9B O'RING	01
15	0502010992	2.0" X 4.0" EMBOLO	01
16	0503010043	PACKING 3750-3250	01
17	0503010994	W2-4000-500 PK O'RING G.E	01
18	0503010817	1.1/4" UNF SELF ADJUSTING NUT	01
19	0501031799	REPAIR KIT	01

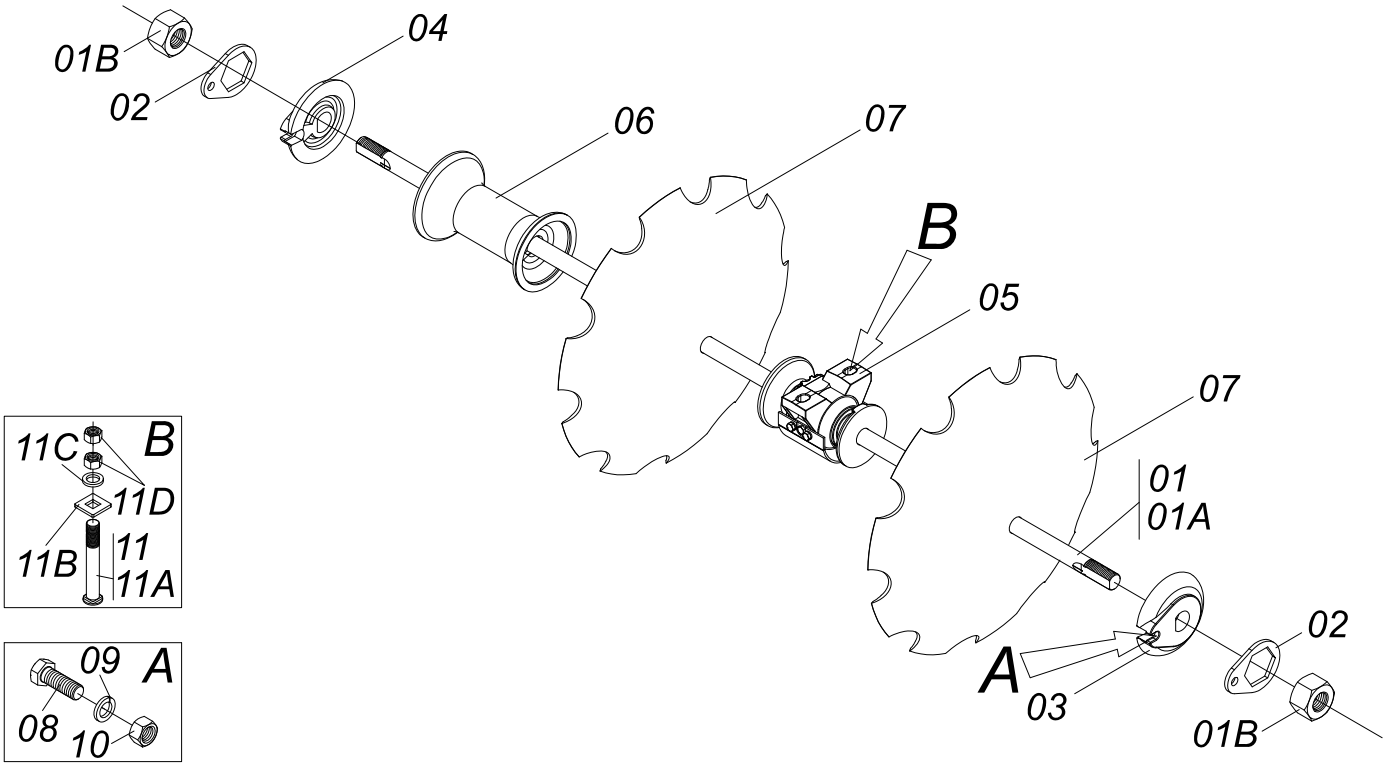

Nº	CÓDIGO	DESCRIPTION	
01	0501046859	1-5/8"X70"AXLE WITH NUT	02
01A	0501015631	1-5/8"X70"AXLE	02
01B	0502040640	1.5/8" 2.3/4"NUT	08
02	0511014339	1-5/8" 2.8"NUT LOCK	08
03	0502011048	1-5/8"EXTERNAL AXLE WASHE	04
04	0502011047	1-5/8"INNER AXLE WASHER	04
05	0501048457	262MMX1.5/8"RD. OIL BAT (ass. 16)	08
06	0502010703	10.35" 1-5/8"SPACER	11
07	0602037006	28"X0.3"NOTCHED DISC BL	26
08	0503011267	5/8"X1.1/2"BOLT	08
09	0503010027	5/8"SPRING WASHER	08
10	0503010013	5/8"NUT	08
11	0501041925	3/4"X3-1/2"BOLT ASSY	16
11A	0501010950	3/4"X3-1/2"BOLT	16
11B	0501010949	3/4"SQUARE WASHER	16
11C	0501010322	FLAT WASHER	16
11D	0503010014	3/4"NUT	32

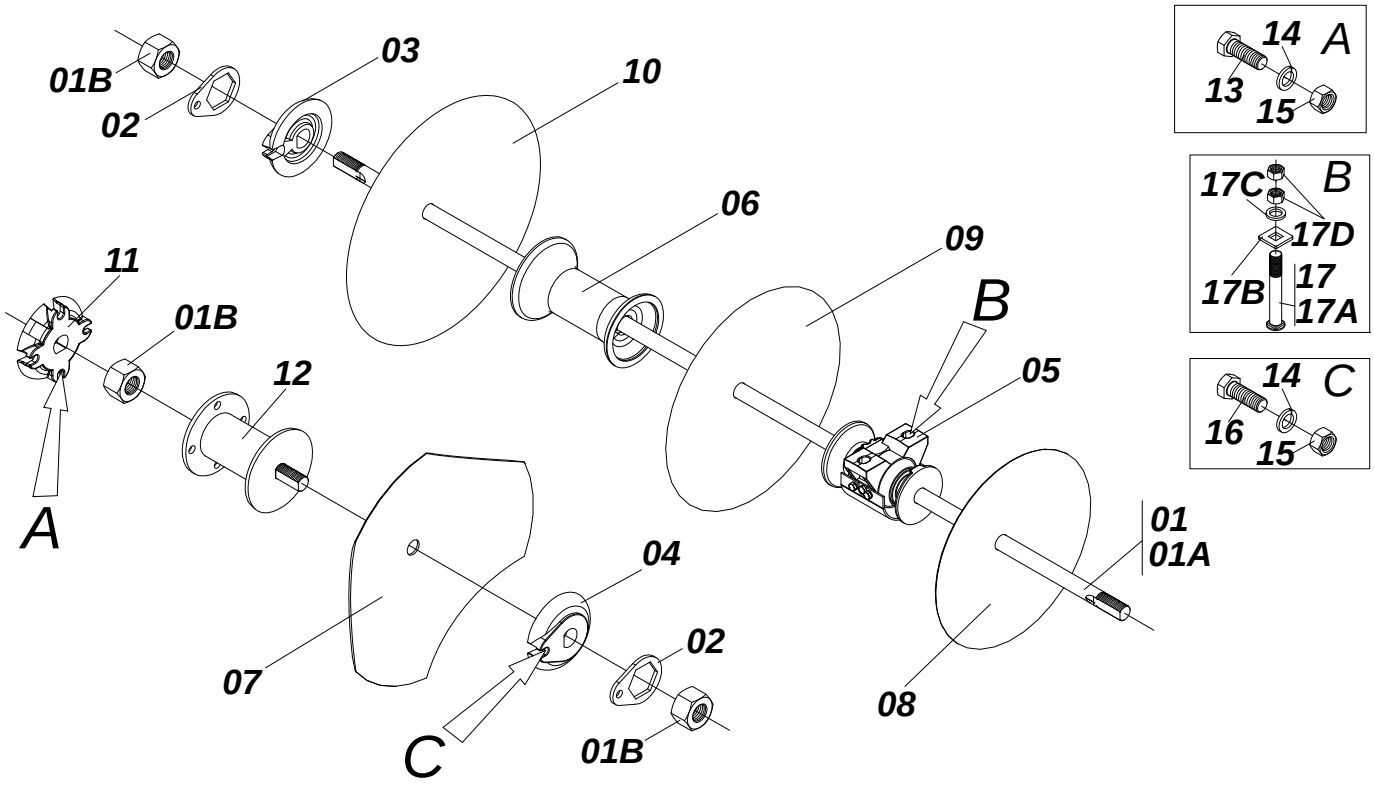

N°	CÓDIGO	DESCRIPTION	
01	0501046856	1-5/8"X59"AXLE WITH NUT	04
01A	0501019012	1-5/8"X59"AXLE	04
01B	0502040640	1.5/8"2.3/4"NUT	09
02	0511014339	1-5/8"2.8"NUT LOCK	08
03	0502011048	1-5/8"EXTERNAL AXLE WASHE	04
04	0502011047	1-5/8"INNER AXLE WASHER	04
05	0501048457	262MM X1.5/8"RD. OIL BAT (ass. 16)	08
06	0502010703	10.35"1-5/8"SPACER	14
07	0602029301	22"X0.2"NOTCHED DISC BL	01
08	0601030005	24"X0.2"PLAIN DISC BLAD	01
09	0601033005	26"X0.2"PLAIN DISC BLAD	01
10	0601039053	28"X0.3"PLAIN DISC BLADE	24
11	0502012377	1-5/8"EXTERNAL AXLE LOK	01
12	0511067146	10.35"AXLE 1-5/8"SPACER	01
13	0503010232	5/8"X1-3/4"BOLT	04
14	0503010027	5/8"SPRING WASHER	12
15	0503010013	5/8"NUT	12
16	0503011267	5/8"X1.1/2"BOLT	08
17	0501041925	3/4"X3-1/2"BOLT ASSY	16
17A	0501010950	3/4"X3-1/2"BOLT	16
17B	0501010949	3/4"SQUARE WASHER	16
17C	0501010322	FLAT WASHER	16
17D	0503010014	3/4"NUT	32

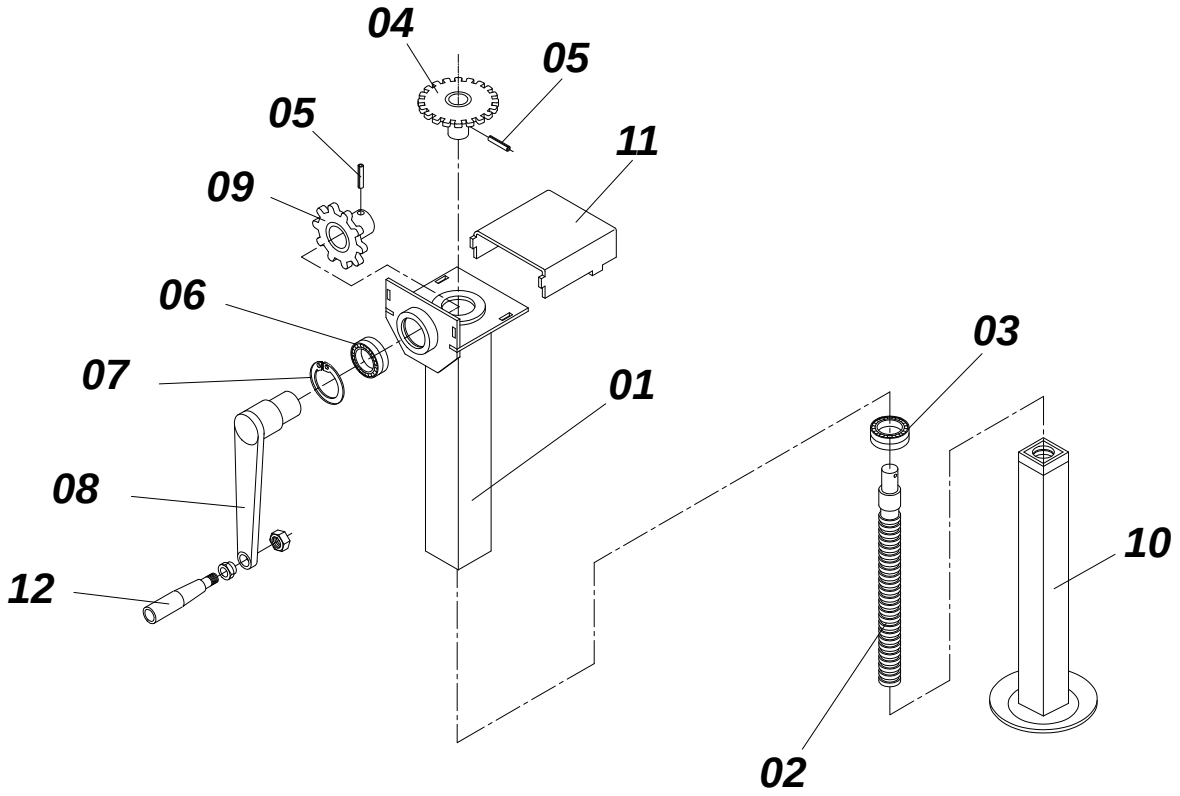

Nº	CÓDIGO	DESCRIPTION	
00	0511043153	DRAWBAR JACK	01
01	0511065948	OUTER BODY DRAWBAR JACK	01
02	0531017603	JACK SPINDLE	01
03	0503013092	51305 BEARING	01
04	0511064234	20Z DRIVER GEAR	01
05	0503010561	0.2" X 1.4"SPRING PIN	02
06	0503011410	BALL BEARING	01
07	0503011105	502047 SEAL RING	01
08	0511064235	JACK CRANK	01
09	0511064233	10Z DRIVER GEAR	01
10	0511064236	JACK INNER BODY	01
11	0531017602	PROTECTION COVER	01
12	0503011312	ROTATIVE CABLE	01

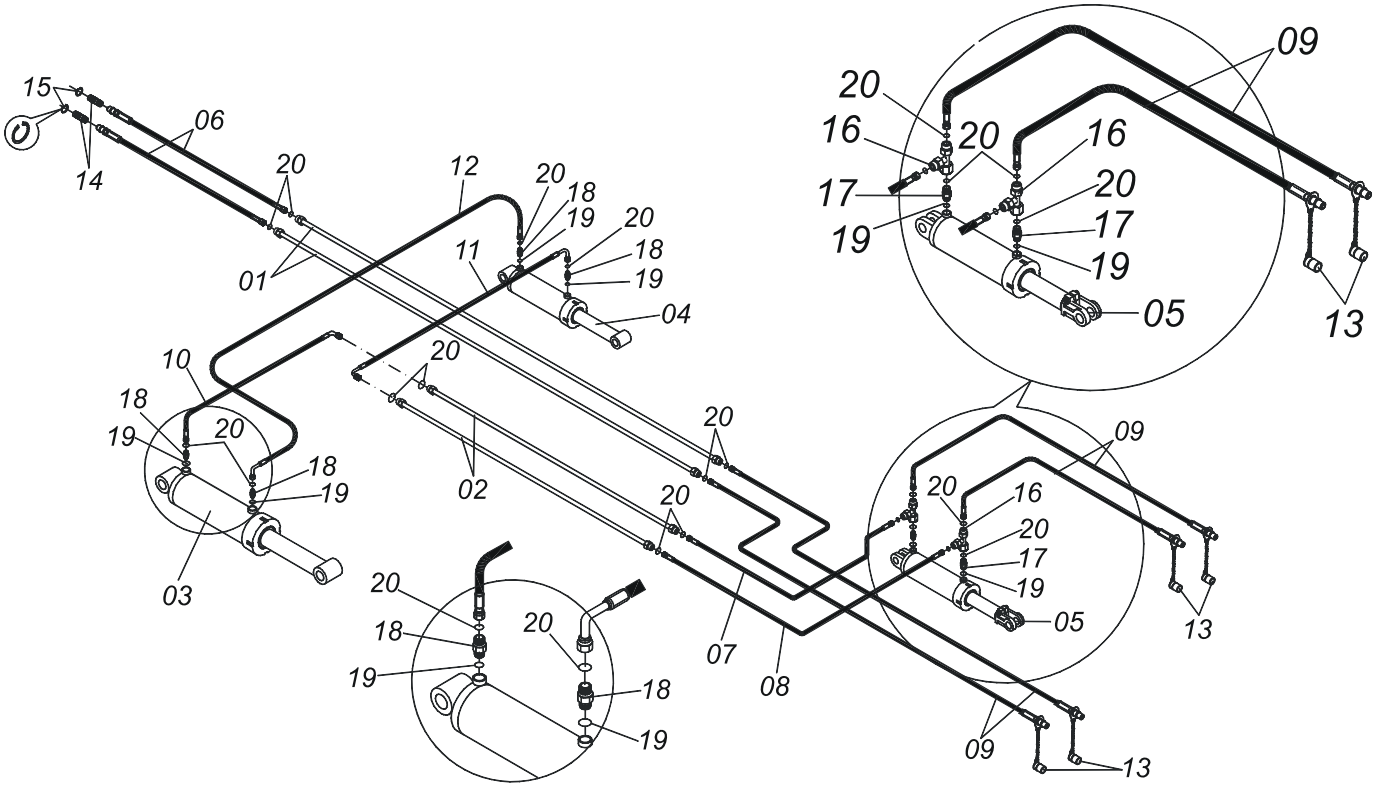

Nº	CÓDIGO	DESCRIPTION	
00	0909091449	48 HYDRAULIC CIRCUIT	01
01	0511066720	19X13,50 TUBE	02
02	0511066719	19X13,50 TUBE	02
03	0511045966	HYDR CYLINDER	01
04	0511045965	HYDR CYLINDER	01
05	0501049064	50,8X101,6X515X203 HYDR (ass. 3)	01
06	0501081088	1/2X650 TR-TM HOSE ASSY	02
07	0501081056	1/2"X750 TR-TR HOSE ASSY	01
08	0501081055	1/2X1000 TR-TR HOSE ASSY	01
09	0501080917	1/2"X208"TR-TM HOSE ASSY	04
10	0501081054	TR-TC HOSE ASSY	01
11	0501080950	1/2X1550 TC-TC HOSE ASSY	01
12	0501081135	1/2X2850 TR-TC HOSE ASSY	01
13	0501053834	QUICK CONECTION (MALE)1/2	04
14	0501053835	FEMALE QUICK COUPLER	02
15	0503010217	501040 SEAL RING	04
16	0503013637	1/2"MALE ADAPTER	04
17	0503032031	3/4"UNF REDUCTION NIPPLE	06
18	0503030923	3/4"UNF X13/16UN OFS X4	04
19	0503010190	2-114 N 3006-9B O'RING	06
20	0503011030	2-014 N 3006-9B O'RING	34

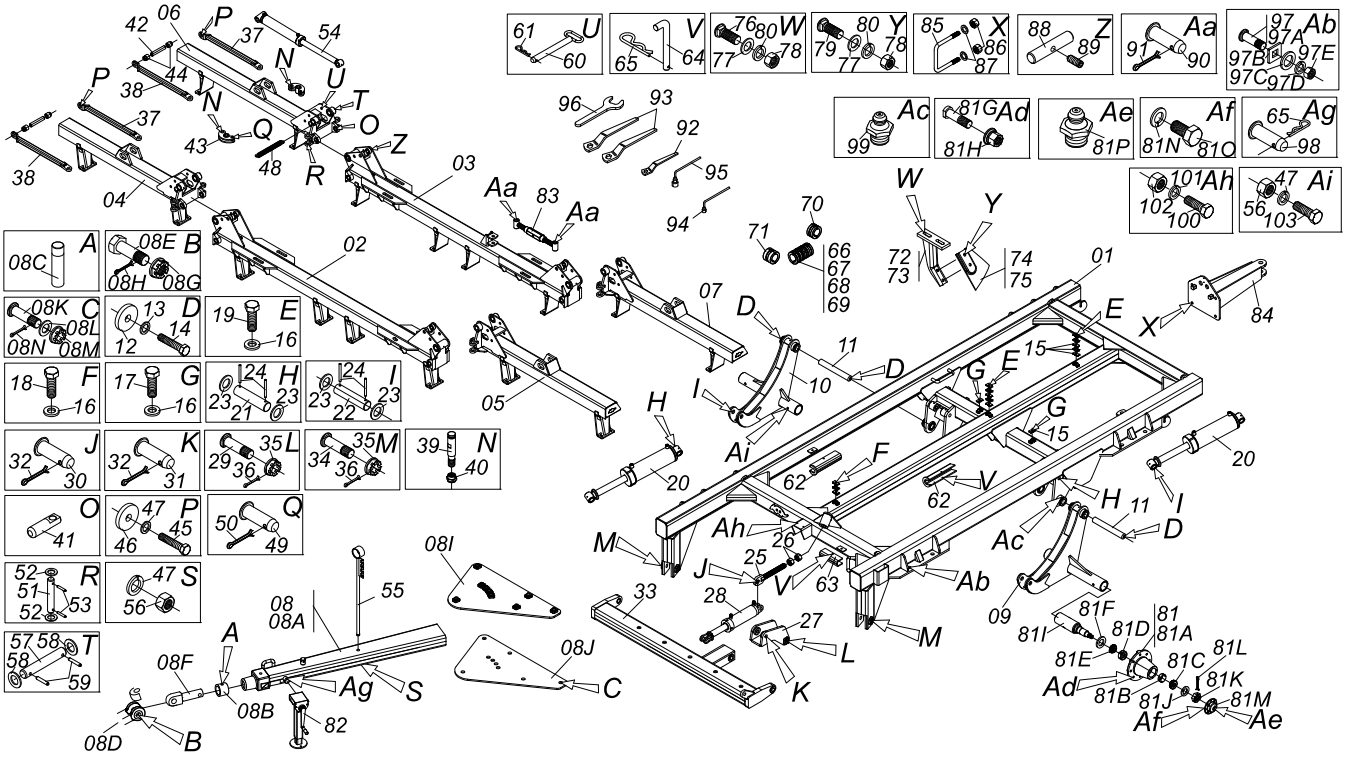

Nº	CÓDIGO	DESCRIPTION	52	56
01	0511066590	GCRO 7010/7012 CENTER FRAME	01	01
02	0511066556	FRONT CENTRAL GANG CARRIER	01	01
03	0511066557	REAR CENTER GANG CARRIER	01	01
04	0511066776	RIGHT SIDE REAR GANG CARRI	01	01
05	0511066777	LEFT FRONT SIDE GANG CARRI	01	01
06	0511066778	RIGHT SIDE REAR GANG CARRI	01	01
07	0511066779	LEFT SIDE REAR GANG CARRIE	01	01
08	0511041592	DRAWBAR ASSY	01	01
08A	0511064669	DRAWBARPCW	01	01
08B	0502040263	LOCK RING	01	01
08C	0501014219	32M107 PIN	01	01
08D	0502040293	YH-90 CLEVIS	01	01
08E	0511067199	BOLT	01	01
08F	0502040264	DRAWBOLTCO	01	01
08G	0502040558	2"CASTLE NUT	01	01
08H	0503010074	3/8X0,15"COTTERPIN	01	01
08I	0511064659	UPPER PLATE	01	01
08J	0511064658	LOWER PLATE	01	01
08K	0521011880	37,50X242 COUPLING SHAFT	06	06
08L	0501012916	FLAT WASHER	06	06
08M	0501011301	1.1/2"CASTLE NUT	06	06
08N	0503010010	1/4"X2.1/2"COTTERPIN	06	06
09	0511066611	LEFT CARRYING-WHEELS SUPPO	01	01
10	0511066741	RIGHT CARRYING-WHEELS SUPP	01	01
11	0531018062	408 COUPLING SHAFT	02	02
12	0521011565	1.04"x3.54"x0.37"FLAT WASHER	04	04
13	0503010012	1"SPRING WASHER	04	04
14	0503011250	1"X2"BOLT	04	04
15	0502010477	UPPER CLIP	15	15
16	0503010180	7/16"SPRING WASHER	05	05
17	0503011102	7/16"X1-1/4"BOLT	02	02
18	0503011103	7/16"X2-1/2"BOLT	01	01
19	0503010723	7/16"X4"BOLT	02	02
20	0511041599	2"X5"X25.75"X13.62"HYDR C (ass. 2)	02	02

Nº	CÓDIGO	DESCRIPTION	52	56
21	0531018105	1.2"X11.8"PIVOT SHAFT	02	02
22	0531018101	1.2"X6.3"PIVOT SHAFT	02	02
23	0501017779	FLAT WASHER	08	08
24	0503011877	0.3"X2.4"SPRING PIN	08	08
25	0511064433	REGULATOR SPINDLE 1-3/4	01	01
26	0501010333	1.3/4"NUT	02	02
27	0511064656	DRAWBAR PIVOT	01	01
28	0501049064	50,8 X 101,6 X 515X20 HYDR (ass. 3)	01	01
29	0521012053	1.5"X8.6"AXLE	01	01
30	0521012538	1.2"X3.5"COUPLING SHAFT	01	01
31	0531019171	1.25"X7"COUPLING SHAFT	01	01
32	0503010523	1/4"X2"COTTERPIN	02	02
33	0511066478	HITCH BAR0	01	01
34	0531018100	1.4"X8.6"COUPLING SHAFT	02	02
35	0501011301	CASTLE NUT	03	03
36	0503010010	1/4"X2.1/2"COTTERPIN	03	03
37	0511067209	FRONT DRIVER ARM	04	04
38	0511067210	DRIVER ARM	04	04
39	0541016749	LOCK AXLE PIVOT	08	08
40	0541019258	1.1/4 ADJUSTING NUT	08	08
41	0541019253	FRAME LOCK AXLE	08	08
42	0541016441	EJE PIVOT AXLE	04	04
43	0511066497	LOK PIVOT0	08	08
44	0541016614	38,20X62X61SLEEVE	08	08
45	0501010098	3/4"X2"BOLT	08	08
46	0511016162	FLAT WASHER	08	08
47	0503010023	3/4"SPRING WASHER	13	13
48	0503032537	50,7X325X6,35 TRACTION	04	04
49	0521010572	0.9"X2.9"COUPLING SHAFT	08	08
50	0503010571	1/4"X1.1/2"COTTERPIN	08	08
51	0541016677	37,20X177 COUPLING SHAFT	08	08
52	0511019685	FLAT WASHER	08	08
53	0503010361	0.4"X2.4"SPRING PIN	08	08
54	0511043621	50,8X101,6 HYDR CYL (ass. 9)	04	04
55	0511064470	HOSE HOLDER ASSY	01	01
56	0503010014	3/4"NUT	05	05
57	0521011720	2.0" X 15.7" COUPLING SHAF	04	04
58	0511019776	FLAT WASHER	08	08
59	0503011069	SPRING PIN	08	08
60	0501069463	1"X8"LOCK PIN	04	04
61	0503030012	HAIR PIN	04	04
62	0511064985	TRANSPORT LOCK	02	02
63	0551010332	TRANSPORT LOCK	01	01
64	0541016844	FIXER LOCK	03	03
65	0503030168	HAIR PIN	04	04
66	0501047895	0.98" ROD STOP	03	03
67	0501047896	1.18" ROD STOP	03	03
68	0501047897	1.38" ROD STOP	03	03
69	0501047898	1.57" ROD STOP	03	03
70	0501047917	1.96" ROD STOP	03	03
71	0501047924	ROD STOP	03	03
72	0511065925	REAR SCRAPER SUPPORT	27	29
73	0511065926	FRONT SCRAPER SUPPORT	26	28
74	0541013461	FRONT SCRAPER SHOVEL	26	28
75	0541013463	REAR SCRAPER SHOVEL	27	29
76	0503013842	5/8"UNC X1-3/4"BOLT	106	114
77	0501012140	FLAT WASHER	212	228
78	0503010013	5/8"NUT	212	228
79	0503012195	5/8"X 1-1/4"FRENCH BOLT	106	114
80	0503010027	5/8"SPRING WASHER	212	228

Nº	CÓDIGO	DESCRIPTION	52	56
81	0501056467	STUB SHAFT & HUB ASSY	04	04
81A	0502012260	TRANSP. BOX CARRYING-WHEEL	04	04
81B	0503013270	3720 CAP	04	04
81C	0503013271	3780 CONE	04	04
81D	0503013266	2720 CAP	04	04
81E	0503013267	2780 CONE	04	04
81F	0503013314	2.5X4.3X0.5 SEAL 5166-	04	04
81G	0501010186	5/8"X 2-1/8"CARRYING BO	32	32
81H	0503010064	5/8"CONIC NUT	32	32
81I	0541016566	SPINDLE010	04	04
81J	0511012492	FLAT WASHER	04	04
81K	0503030009	1"X0.9"CASTLE NUT	04	04
81L	0503010018	5/32"X1-1/2" COTTERPIN	04	04
81N	0503011444	5/16"SPRING WASHER	16	16
81M	0502020591	COVER	04	04
81O	0503010358	5/16"X7/8"BOLT	16	16
81P	0503010002	GREASE FITTING	04	04
82	0511043153	DRAWBAR JACK (ass. 6)	01	01
83	0501052005	STABILIZER FOR GANG (ass. 10)	01	01
84	0501069421	REAR HITCH GCRO	01	01
85	0541016679	7/8 UNF X188,5 CLAMP	02	02
86	0503010558	7/8"NUT	04	04
87	0503010408	7/8"SPRING WASHER	04	04
88	0541016676	1.1/2X175 AXLE	04	04
89	0503013662	1/2"X1"BOLT	04	04
90	0521010546	1.2"X5.7"COUPLING SHAFT	02	02
91	0503010523	COTTERPIN	02	02
92	0501011432	1-1/2" AND 1-5/8 GANG BOLT	01	01
93	0501011431	1-3/4" GANG BOLT WRENCH	02	02
94	0501061609	3/4"WRENCH	01	01
95	0501062300	1-1/4" WRENCH	01	01
96	0541015451	2.3/8"X3/4"WRENCH	01	01
97	0501041102	1-1/4"X 3-3/4"ASSY BOLT	08	08
97A	0501015348	1-1/4"X 3-3/4"BOLT	08	08
97B	0501010953	1-1/4"SQUARE WASHER	08	08
97C	0531010713	FLAT WASHER	08	08
97D	0503010070	1.1/4" SPRING WASHER	08	08
97E	0501010087	1.1/4"UNC NUT	08	08
98	0541011345	COUPLING SHAFT	01	01
99	0503010002	GREASE FITTING	65	65
100	0503010765	3/8"X3"BOLT	02	02
101	0503010025	3/8"SPRING WHASHER	02	02
102	0503010026	3/8"NUT	02	02
103	0503013185	3/4"UNC X 5.1/2"BOLT	04	04

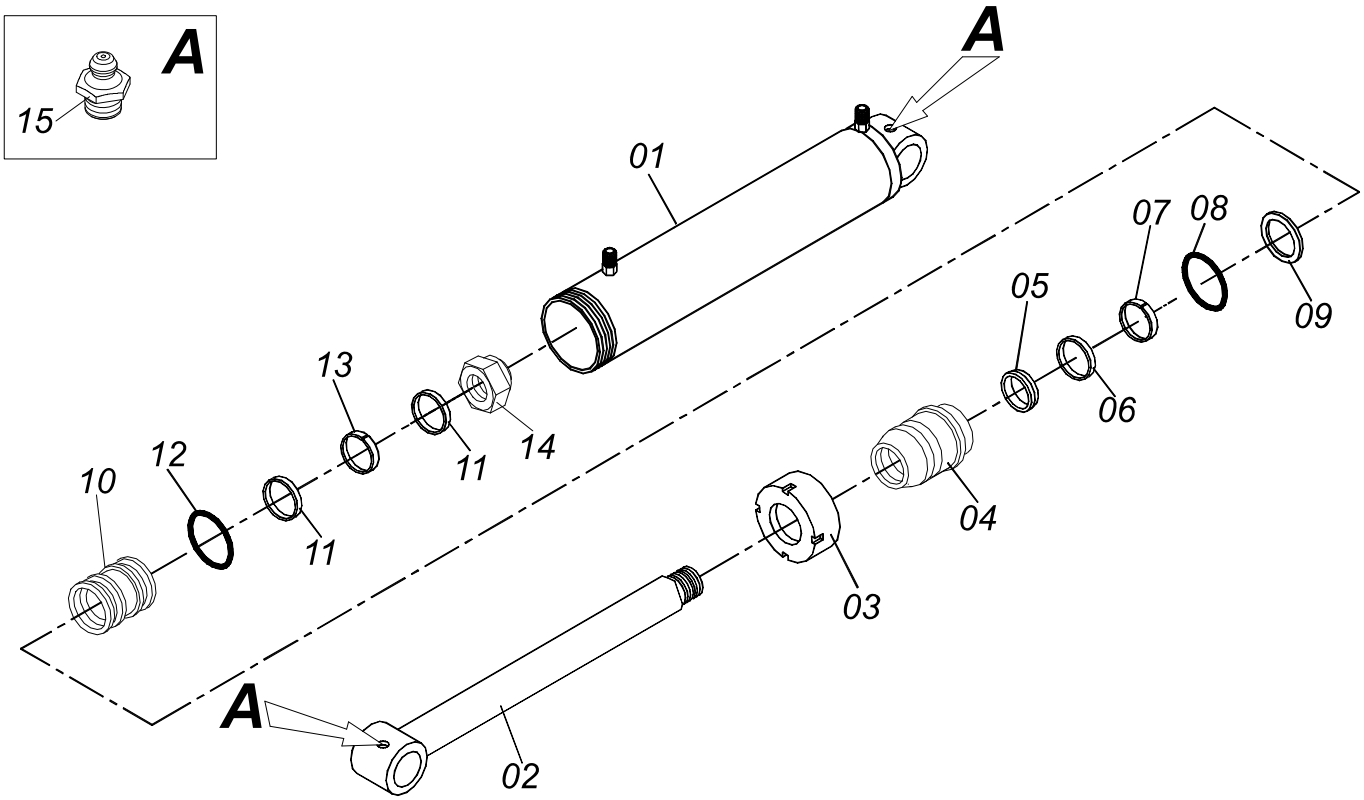

N°	CÓDIGO	DESCRIPTION	
00	0511043621	50,8X101,6 HYDRAULIC CYL	01
01	0511066371	101,6 X 588 CASE	01
02	0511066370	50,80 X 713"TURNBUCLE	01
03	0502010017	4"HEAD	01
04	0502010778	2" X 4.2"RING SUPPORT	01
05	0503010039	D-2000 SCRAPER RING	01
06	0503010991	PACKING 1870-2000-375-B	01
07	0503010952	W2-2250-500 PK O'RING G.E	01
08	0503010338	2-342 N 3006-9B O'RING	01
09	0503011061	8-342 BACK-UP RING	01
10	0502010992	2.0" X 4.0"EMBOLO	01
11	0503010043	PACKING 3750-3250	02
12	0503010345	2-218 N 3006-9B O'RING	01
13	0503010994	W2-4000-500 PK O'RING G.E	01
14	0503010044	1.1/4" UNF SELF ADJUSTING	01
15	0503010002	GREASE FITTING	02

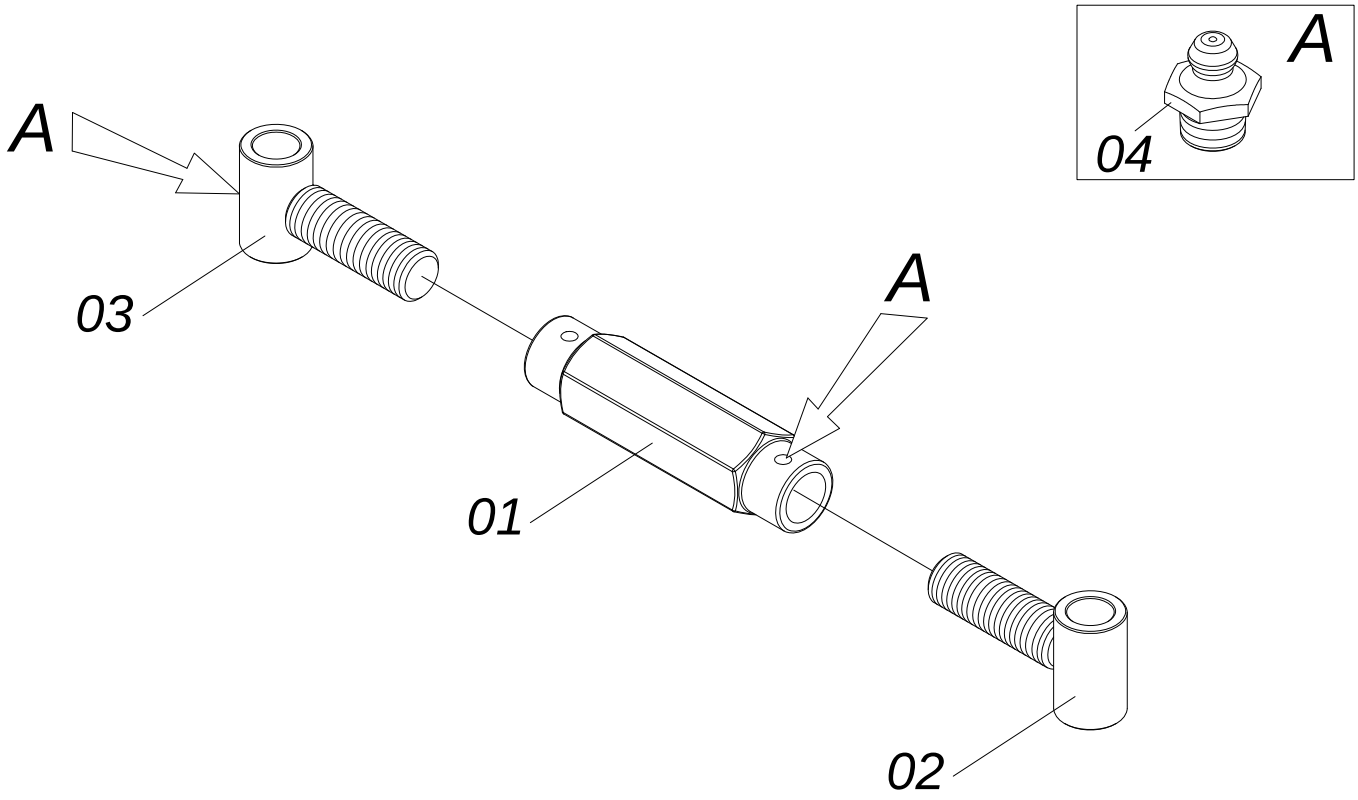

Nº	CÓDIGO	DESCRIPTION	
00	0501052005	STABILIZER FOR GANG	01
01	0502011469	245 ADJUSTMENT NUT	01
02	0501069416	JACKET	01
03	0501069417	JACKET	01
04	0503010002	GREASE FITTING	04

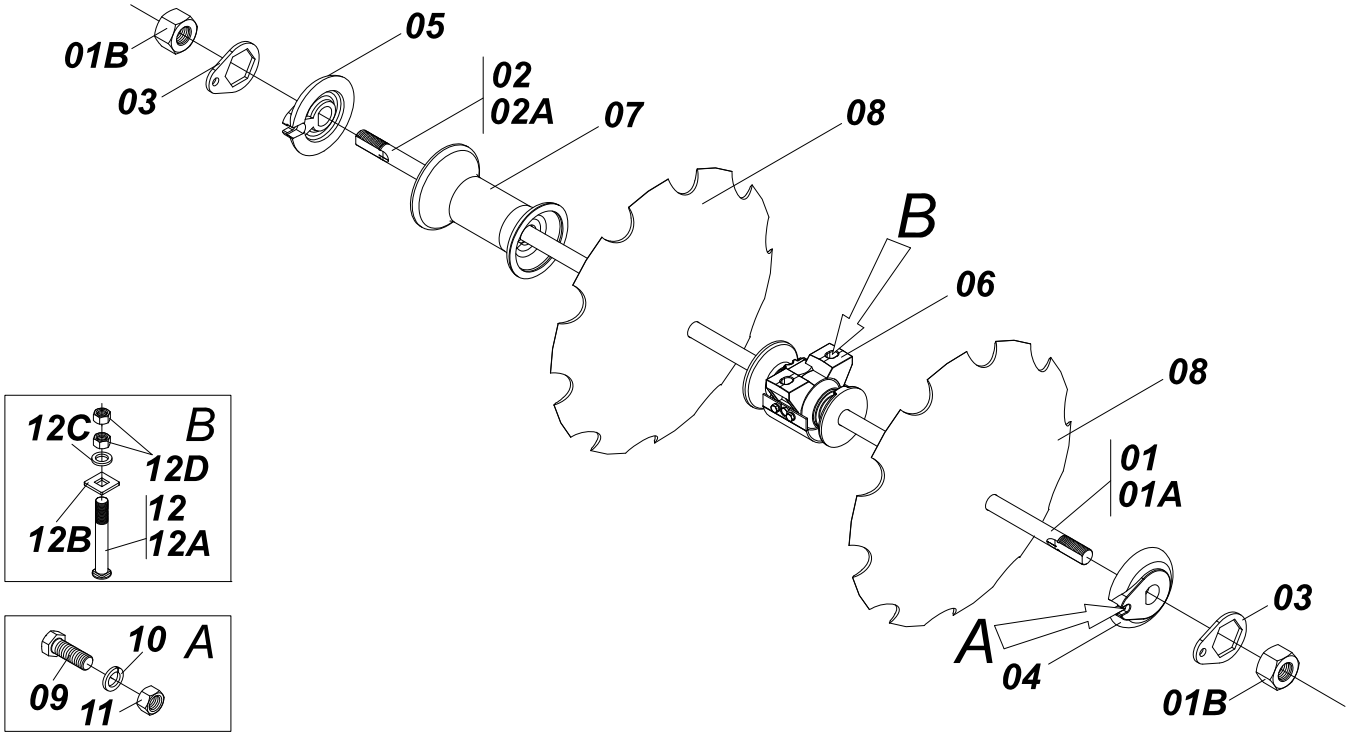

N°	CÓDIGO	DESCRIPTION	
01	0501046856	1-5/8"X59"AXLE WITH NUT	02
01A	0501019012	1-5/8"X59"AXLE	02
01B	0502040640	1.5/8"2.3/4"NUT	08
02	0501046859	1-5/8"X70"AXLE WITH NUT	02
02A	0501015631	1-5/8"X70"AXLE	02
03	0511014339	1-5/8" 2.8"NUT LOCK	08
04	0502011048	1-5/8"EXTERNAL AXLE WASHE	04
05	0502011047	1-5/8"INNER AXLE WASHER	04
06	0501048457	262MM X1.5/8" RD. OIL BAT (ass. 16)	08
07	0502010703	10.35"1-5/8" SPACER	14
08	0602037006	28"X 0.3"NOTCHED DISC BL	26
09	0503011267	5/8"X1.1/2"BOLT	08
10	0503010027	5/8"SPRING WASHER	08
11	0503010013	5/8"NUT	08
12	0501041925	3/4"X 3-1/2"BOLT ASSY	16
12A	0501010950	3/4"X 3-1/2"BOLT	16
12B	0501010949	3/4"SQUARE WASHER	16
12C	0501010322	FLAT WASHER	16
12D	0503010014	3/4"NUT	32

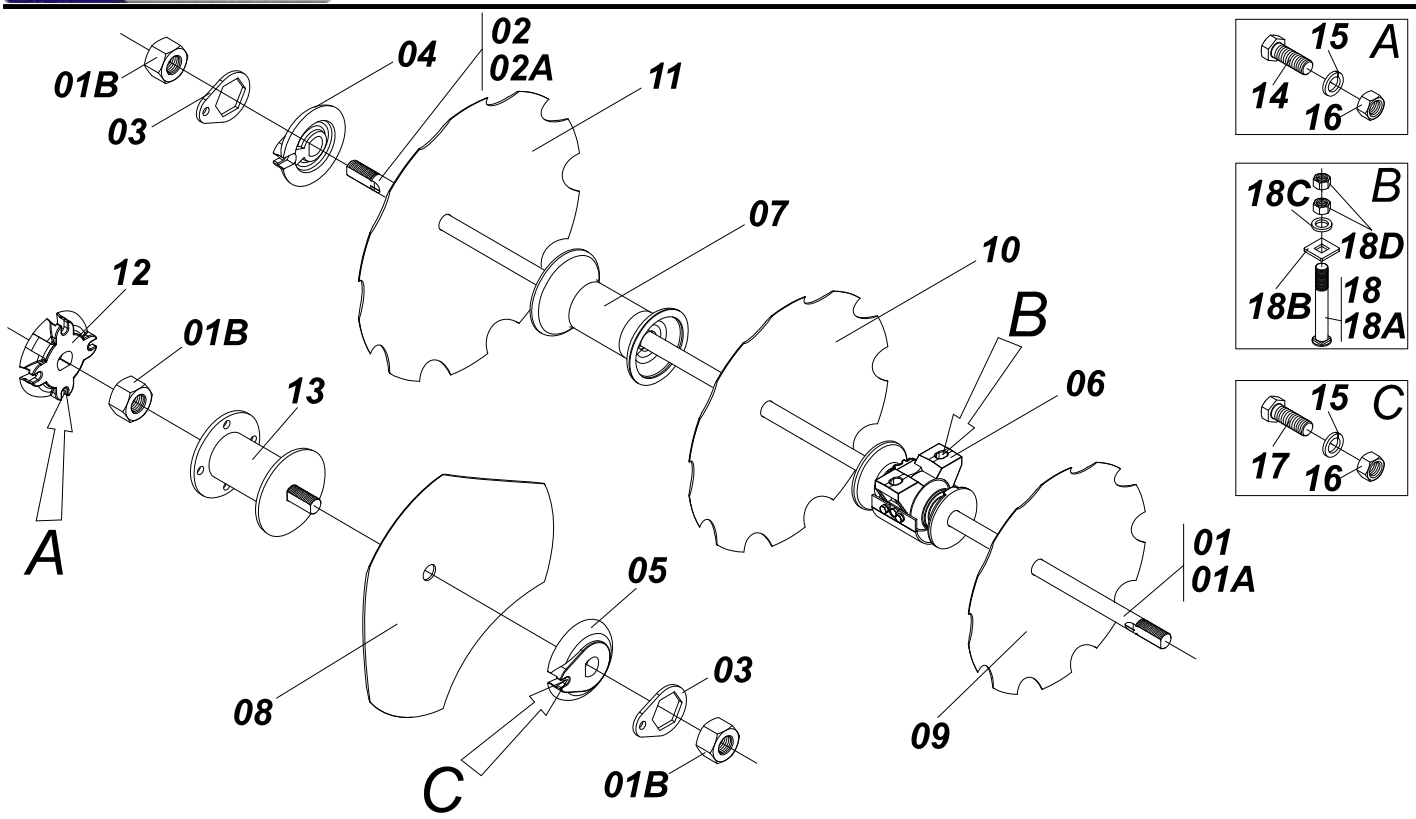

N°	CÓDIGO	DESCRIPTION	
01	0501046856	1-5/8"X59"AXLE WITH NUT	02
01A	0501019012	1-5/8"X59"AXLE	02
01B	0502040640	1.5/8"2.3/4"NUT	09
02	0501046859	1-5/8"X70"AXLE WITH NUT	02
02A	0501015631	1-5/8"X70"AXLE	02
03	0511014339	1-5/8"2.8"NUT LOCK	08
04	0502011048	1-5/8"EXTERNAL AXLE WASHE	04
05	0502011047	1-5/8"INNER AXLE WASHER	04
06	0501048457	262MM X1.5/8"RD. OIL BAT (ass. 16)	08
07	0502010703	10.35"1-5/8"SPACER	14
08	0602029301	22"X0.2"NOTCHED DISC BL	01
09	0602030236	24"X7,5 NOTCHED DISC BLA	01
10	0602033067	26"X7.5 NOTCHED DISC BLA	01
11	0602037006	28"X0.3"NOTCHED DISC BL	24
12	0502012377	1-5/8"EXTERNAL AXLE LOK	01
13	0511067146	10.35"AXLE 1-5/8"SPACER	01
14	0503010232	5/8"X1-3/4"BOLT	04
15	0503010027	5/8"SPRING WASHER	12
16	0503010013	5/8"NUT	12
17	0503011267	5/8"X1.1/2"BOLT	08
18	0501041925	3/4"X3-1/2"BOLT ASSY	16
18A	0501010950	3/4"X3-1/2"BOLT	16
18B	0501010949	3/4"SQUARE WASHER	16
18C	0501010322	FLAT WASHER	16
18D	0503010014	3/4"NUT	32

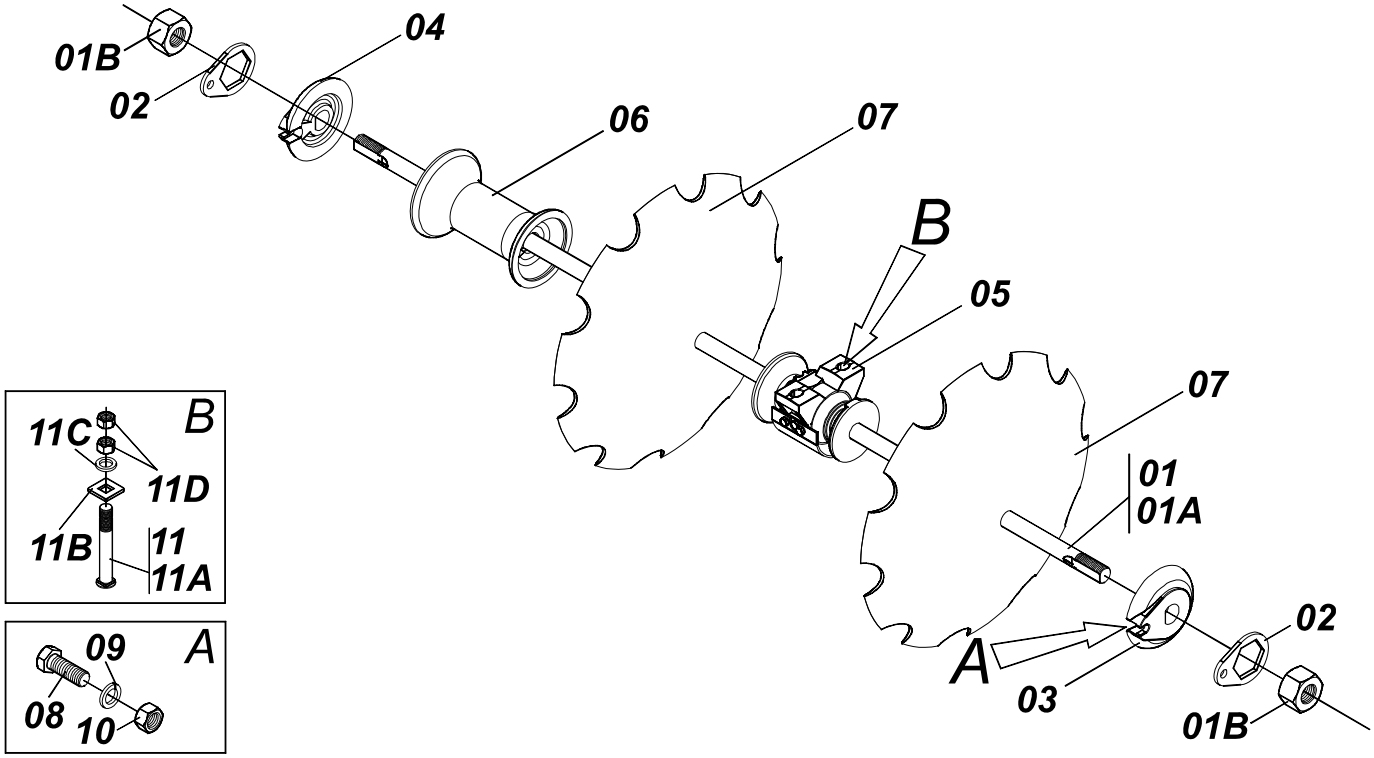

Nº	CÓDIGO	DESCRIPTION	
01	0501046859	1-5/8"X70"AXLE WITH NUT	02
01A	0501015631	1-5/8"X70"AXLE	02
01B	0502040640	1.5/8" 2.3/4"NUT	08
02	0511014339	1-5/8" 2.8"NUT LOCK	08
03	0502011048	1-5/8"EXTERNAL AXLE WASHEr	04
04	0502011047	1-5/8"INNER AXLE WASHER	04
05	0501048457	262MM X1.5/8" RD. OIL BAT (ass. 16)	08
06	0502010703	10.35" 1-5/8"SPACER	14
07	0602037004	28"X0.2"NOTCHED DISC BL	26
08	0503011267	5/8"X1.1/2"BOLT	08
09	0503010027	5/8"SPRING WASHER	08
10	0503010013	5/8"NUT	08
11	0501041925	3/4"X3-1/2"BOLT ASSY	16
11A	0501010950	3/4"X3-1/2"BOLT	16
11B	0501010949	3/4"SQUARE WASHER	16
11C	0501010322	FLAT WASHER	16
11D	0503010014	3/4"NUT	32

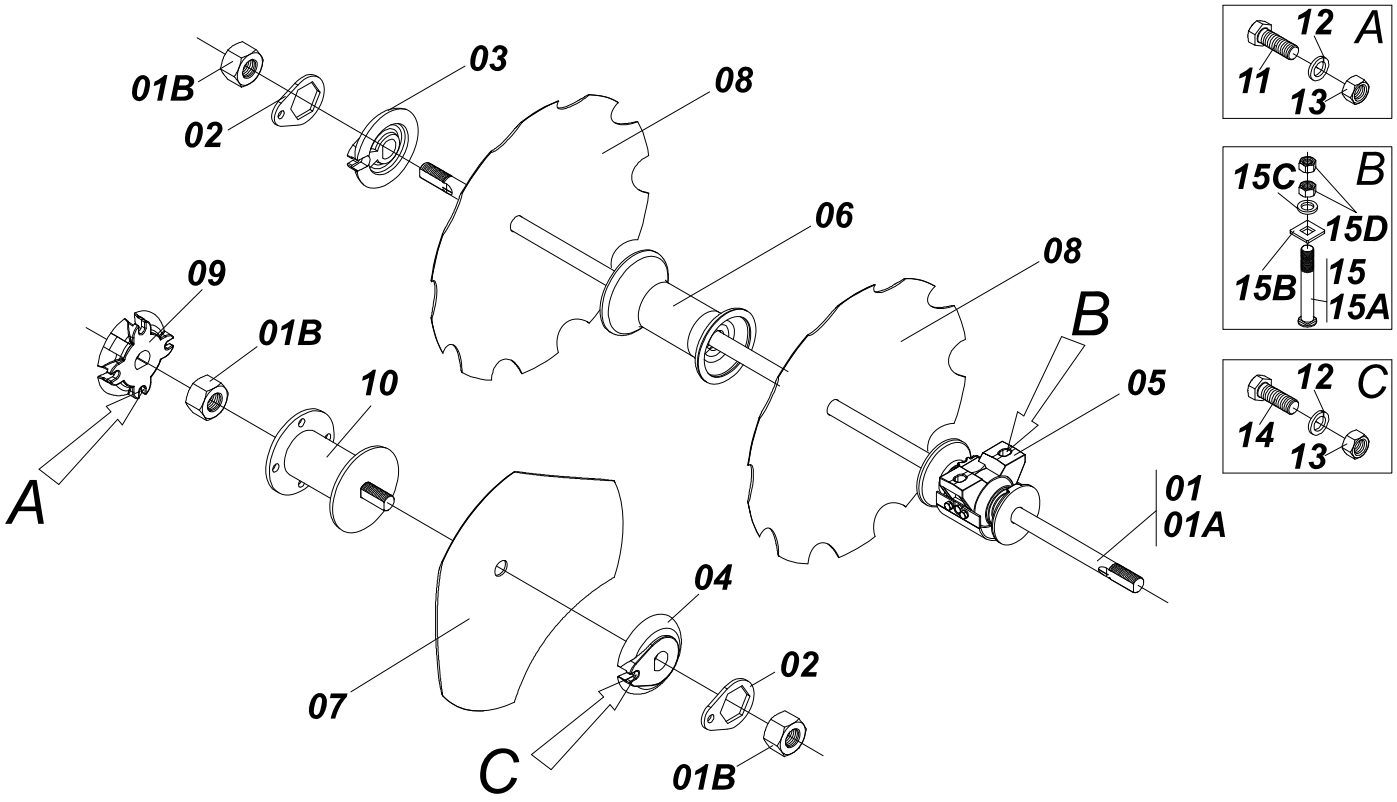

N°	CÓDIGO	DESCRIPTION	
01	0501046859	1-5/8"X70"AXLE WITH NUT	04
01A	0501015631	1-5/8"X70"AXLE	04
01B	0502040640	1.5/8"2.3/4"NUT	09
02	0511014339	1-5/8"2.8"NUT LOCK	08
03	0502011048	1-5/8"EXTERNAL AXLE WASHE	04
04	0502011047	1-5/8"INNER AXLE WASHER	04
05	0501048457	262MM X1.5/8"RD. OIL BAT (ass. 16)	08
06	0502010703	10.35" 1-5/8"SPACER	16
07	0602033267	26"X6 NOTCHED DISC	01
08	0602037004	28"X0.2"NOTCHED DISC BL	28
09	0502012377	1-5/8"EXTERNAL AXLE LOK	01
10	0511067146	10.35"AXLE 1-5/8"SPACER	01
11	0503010232	5/8"X1-3/4"BOLT	04
12	0503010027	5/8"SPRING WASHER	12
13	0503010013	5/8"NUT	12
14	0503011267	5/8"X1.1/2"BOLT	08
15	0501041925	3/4"X3-1/2"BOLT ASSY	16
15A	0501010950	3/4"X3-1/2"BOLT	16
15B	0501010949	3/4"SQUARE WASHER	16
15C	0501010322	FLAT WASHER	16
15D	0503010014	3/4"NUT	32

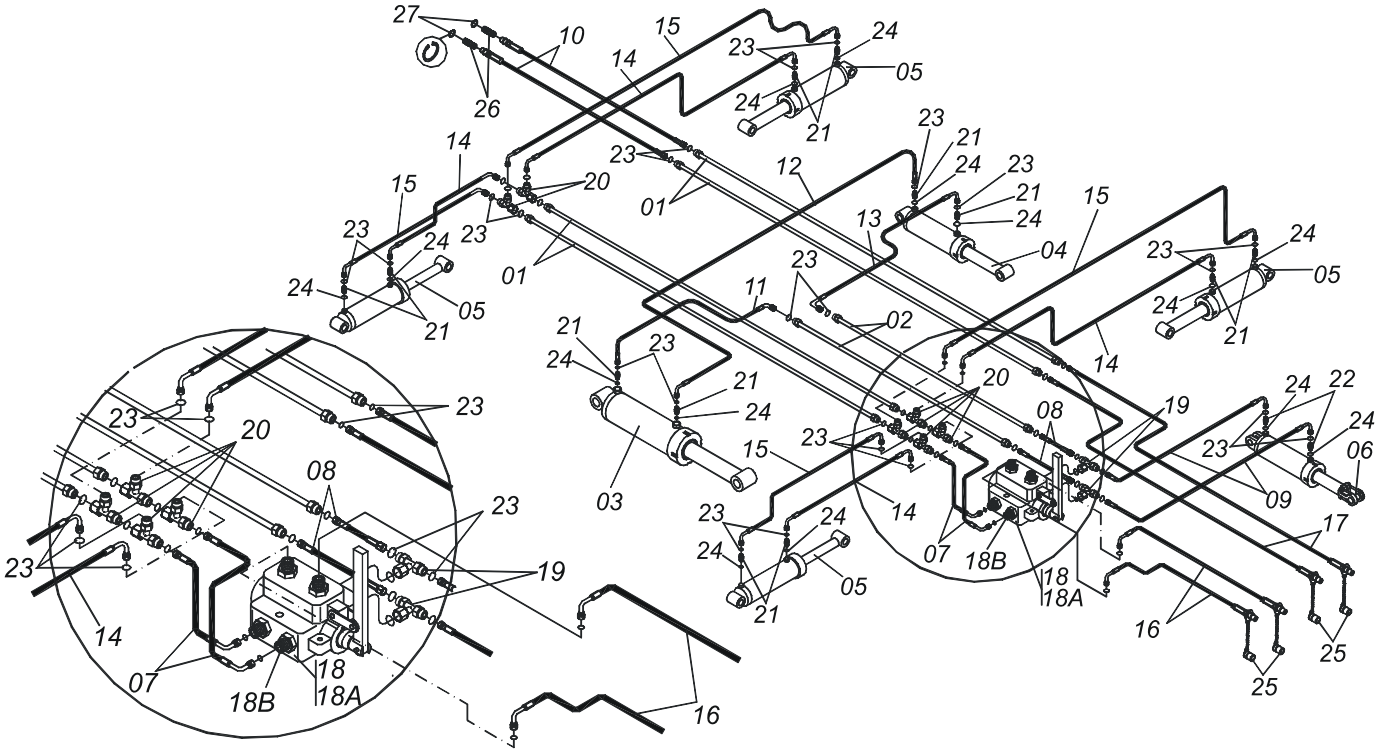

Nº	CÓDIGO	DESCRIPTION	
01	0511066720	19X13,50 TUBE	04
02	0511066719	19X13,50 TUBE	02
03	0511045966	HYDR CYLINDER	01
04	0511045965	HYDR CYLINDER	01
05	0511043621	50,8X101,6 HYDRAULIC CYL (ass. 9)	04
06	0501049064	50,8X101,6X515X203 HYDR (ass. 3)	01
07	0501080549	1/2"X450 TR-TC OFS HOSE	02
08	0501080537	1/2"X600 TR-TR OFS HOSE	02
09	0501080970	1/2"X23.6"TR-TC OFS HOS	02
10	0501081088	1/2X650 TR-TM HOSE ASSY	02
11	0501081054	TR-TC HOSE ASSY	02
12	0501081135	1/2X2850 TR-TC HOSE ASSY	04
13	0501080950	1/2X1550 TC-TC HOSE ASSY	02
14	0501080952	1/2X2850 TC-TC HOSE ASSY	04
15	0501081074	1/2"X3450 TC-TC OFS HOSE	04
16	0501081128	1/2"X5300 TC-TM OFS HOSE	02
17	0501080917	1/2"X208"TR-TM HOSE ASS	02
18	0511043139	VALVE ASSY	01
18A	0503013319	VALVE ASSY	01
18B	0503032098	13/16"NIPPLE	06
19	0503013272	T 1/2"MALE ADAPTER ASSY	02
20	0503013637	T 1/2"MALE ADAPTER	08
21	0503030923	3/4"UNF X13/16UN OFS X4	12
22	0503032031	3/4"UNF REDUCTION NIPPLE	02
23	0503010190	2-114 N 3006-9B O'RING	14
24	0503011030	2-014 N 3006-9B O'RING	48
25	0501053834	QUICK CONECTION (MALE) 1/2	04
26	0501053835	FEMALE QUICK COUPLER	02
27	0503010217	501040 SEAL RING	04

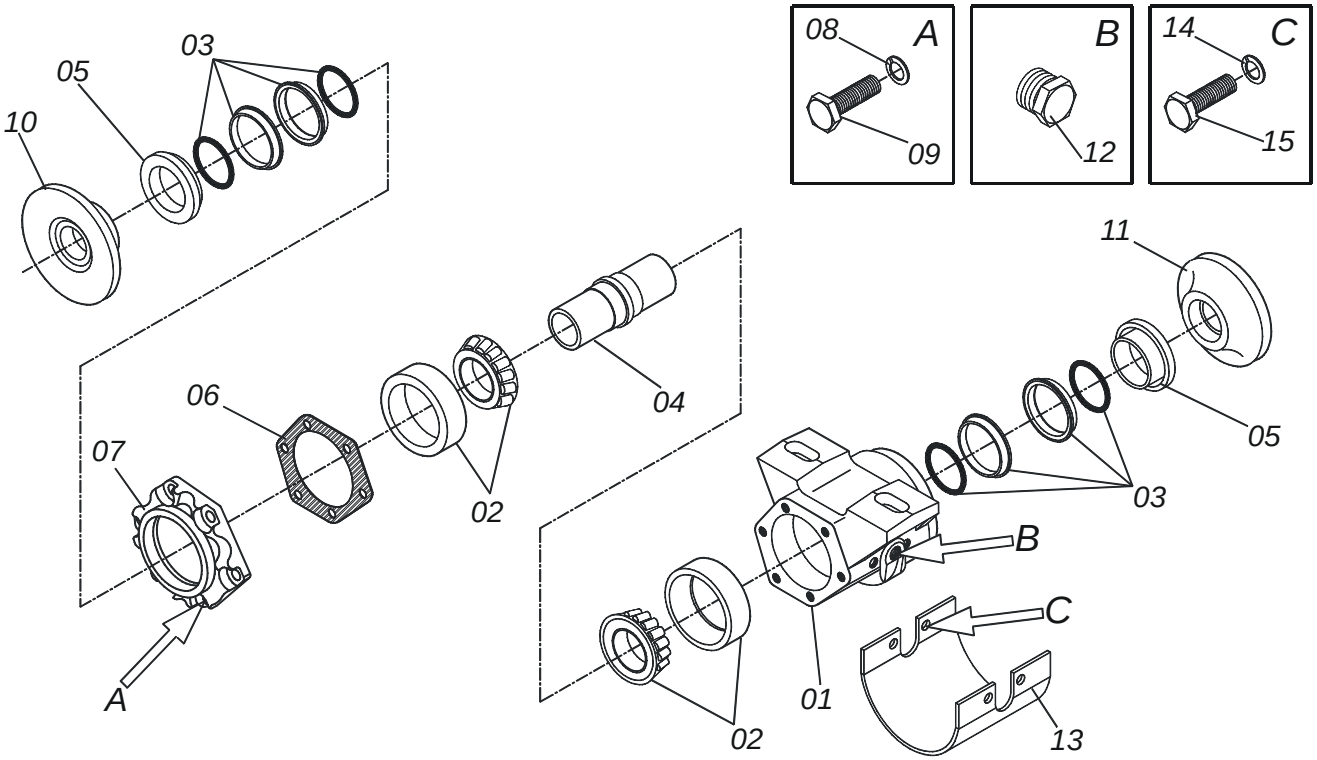

N°	CÓDIGO	DESCRIPTION	
00	0501048457	262MM X 1.5/8"RD. OIL BAT	01
01	0502020636	8.8" X 1-5/8"OIL BATH BEARING	01
02	0503013496	3982/3920 ROLLER BEARING	02
03	0503030027	DUO-CONE SEAL	02
04	0502010740	AXLE	01
05	0502010736	SEAL RETAINER	02
06	0503030030	5.6"X 4.4" X 0.01"GASKET	02
07	0502020161	BEARING CAP	01
08	0503010025	3/8" SPRING WHASHER	06
09	0503011087	3/8" X 1"BOLT	06
10	0502011856	1-5/8 OUTER FLANGE CM/DM	01
11	0502011855	1-5/8 INNER FLANGE CM/DM	01
12	0503012151	3/8"BSP PLUG	02
13	0521012933	BEARING GUARD	01
14	0503010019	1/2"SPRING WASHER	04
15	0503011401	1/2" X 3/4"BOLT	04

Marchesan Implementos e Máquinas Agrícolas Tatu S.A.

Av. Marchesan 1979 - Caixa Postal 131

CEP 15994-900

Matão - São Paulo - Brasil

Phone	**55 16 3382-8282**
Fax	**55 16 3382-1009**
Parts Fax	**55 16 3382-5239**